# Type UHG

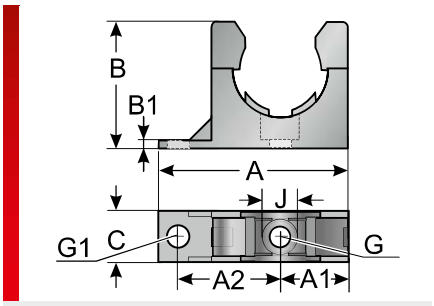


## PRODUCT INFORMATION

The UHG holder is made of specially modified polyamide. The material is halogen, phosphor and cadmium-free. The holder is used to fix cable protection conduits to equipment and machinery.
The UHG holder features the following advantages:

- The additional flap can be used to prevent rotation of the holder
- Protective conduit is simply snapped in
- Optimum connection of conduit to holder thanks to double webs of holder
- Optional BL bracket for applications with high stresses

Specification:

- EN 45545-2 3x HL3

## SPECIFICATIONS

-40 – 110 °C short term 140 °C

UL listed material
Mod. polyamide PA 6

Acc. to UL94 V0 self-extinguishing

RoHS HF EU Made in Germany

| Type | Order No. | Colour | Suitable for Murrflex | A mm | B mm | C mm | G mm | J mm | A1 mm | A2 mm | B1 mm | G1 mm | Pack qty. |
|---|---|---|---|---|---|---|---|---|---|---|---|---|---|
| **Suitable for Murrflex EW and EWX** | | | | | | | | | | | | | |
| UHG 09 | 83621250 | Black | M12/P09 | 46.00 | 23.00 | 12.50 | 4.50 | 7.50 | 15.00 | 24.50 | 2.00 | 6.20 | 100 |
| UHG 11 | 83621252 | Black | M16/P11 | 46.00 | 23.00 | 12.50 | 4.50 | 7.50 | 15.00 | 24.50 | 2.00 | 6.20 | 100 |
| UHG 16 | 83621254 | Black | M20/P16(S) | 50.00 | 30.00 | 15.00 | 5.50 | 9.50 | 17.50 | 27.00 | 2.50 | 6.20 | 100 |
| UHG 21 | 83621256 | Black | M25/P21(S) | 57.00 | 38.00 | 16.00 | 6.50 | 11.50 | 21.00 | 30.70 | 2.50 | 6.20 | 100 |
| UHG 29 | 83621258 | Black | M32/P29(S) | 67.00 | 43.50 | 16.00 | 6.50 | 11.50 | 25.50 | 35.30 | 3.00 | 6.20 | 50 |
| UHG 36 | 83621260 | Black | M40/P36(S) | 77.00 | 51.00 | 18.50 | 6.50 | 11.50 | 30.50 | 40.00 | 3.50 | 6.20 | 50 |
| UHG 48 | 83621262 | Black | M50/P48(S) | 89.00 | 64.00 | 19.00 | 6.50 | 11.50 | 37.00 | 46.50 | 3.50 | 6.20 | 50 |