Type SSG (conduit clamp)

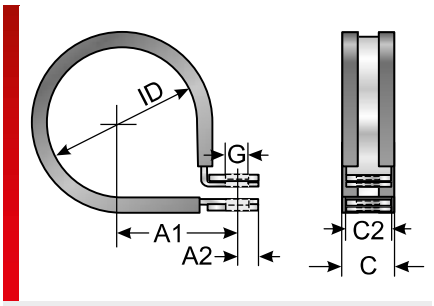

To size 48

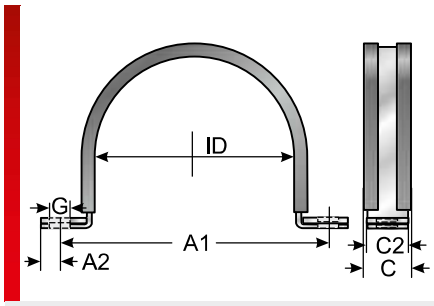

From size 70

PRODUCT INFORMATION

The type SSG conduit clamp is made of sheet steel, with a zinc plated surface and is partially covered with a halogen-free elastomer. The SSG are used for easy fixing or securing of cable protection conduits and distinguish themselves with the following advantages:

- Quick and easy assembly
- The elastomer cover prevents damage to the protective conduits
- Suitable for all cable protection conduits

SPECIFICATIONS

-40 – 120 °C

Galvanised sheet steel
EPDM

RoHS

Type	Order No.	C mm	G mm	ID mm	A1 mm	A2 mm	C2 mm	Pack qty.
SSG 06/M5	83723210	15.00	5.30	10.00	13.00	5.00	12.00	25
SSG 06/M6	83723211	18.50	6.40	10.00	16.20	6.00	15.00	25
SSG 07/M5	83723212	15.00	5.30	12.00	14.00	5.00	12.00	25
SSG 07/M6	83723213	18.50	6.40	12.00	17.20	6.00	15.00	25
SSG 09/M5	83723214	15.00	5.30	13.00	14.50	5.00	12.00	25
SSG 09/M6	83723215	18.50	6.40	13.00	17.70	6.00	15.00	25
SSG 11/M5	83723216	15.00	5.30	15.00	15.50	5.00	12.00	25
SSG 11/M6	83723217	18.50	6.40	15.00	18.70	6.00	15.00	25
SSG 16/M5	83723218	15.00	5.30	21.00	18.50	5.00	12.00	25
SSG 16/M6	83723219	18.50	6.40	21.00	21.70	6.00	15.00	25
SSG 21/M6	83723222	18.50	6.40	28.00	25.20	6.00	15.00	25
SSG 29/M6	83723224	18.50	6.40	34.00	28.20	6.00	15.00	25
SSG 36/M8	83723226	25.00	8.40	40.00	34.50	8.50	20.00	10
SSG 48/M6	83723228	18.50	6.40	54.00	38.20	6.00	15.00	10
SSG 70/M8	83723230	24.50	8.40	78.00	107.00	8.50	20.00	10
SSG 95/M8	83723232	24.50	8.40	105.00	134.00	8.50	20.00	10